MUC500 RS Quick start guide

Respect the safety guidelines in the manual!

1.

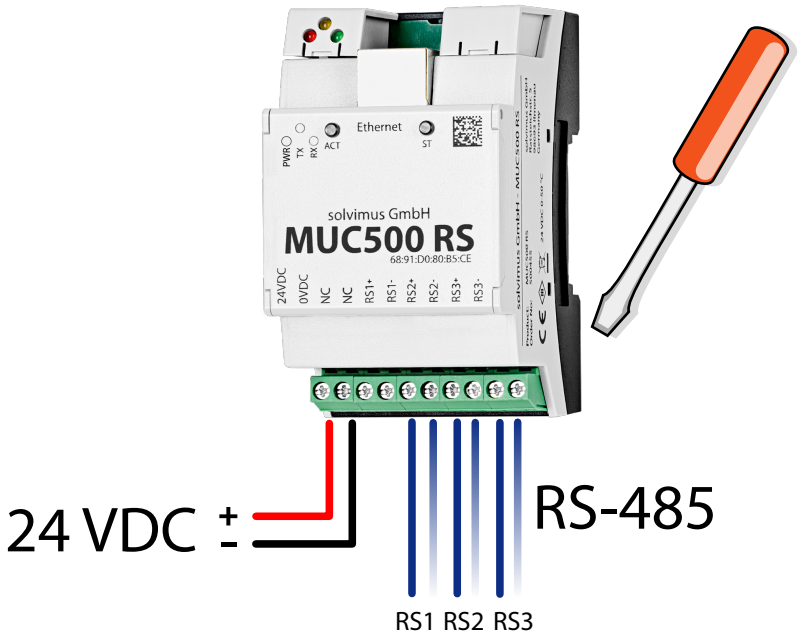

2.

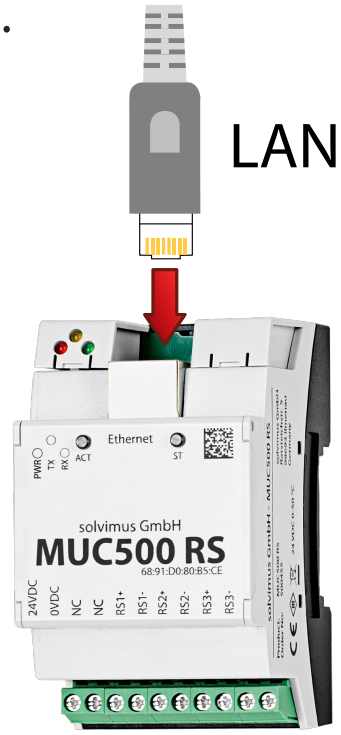

3.

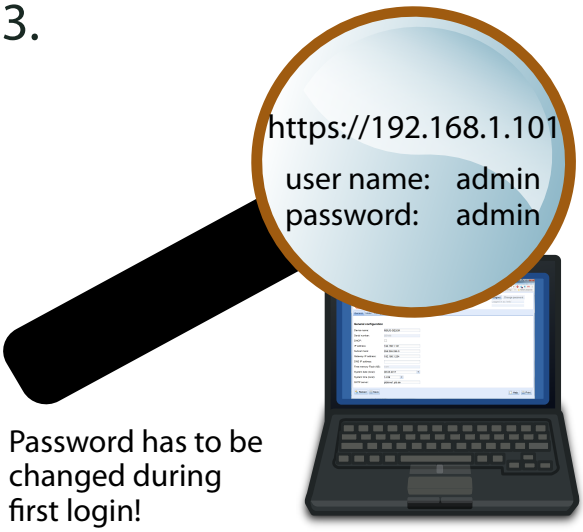

Password has to be changed during first login!

IP address:	192.168.1.101
Subnet mask:	255.255.255.0
Gateway:	192.168.1.254

Use our ***Netdiscover Tool***.
Download here:
www.solvimus.de/en/products/downloads-2/
under category "Software"!

4.



When purchasing the solvimus catalogue items, the customer is obliged to read the product manuals which are available for download on the solvimus homepage.

Do you have questions or need support?
Our support team is here for you:
+49 3677 7613065
support@solvimus.de

solvimus GmbH - Ratsteichstr. 5 - 98693 Ilmenau - Germany
Phone: +49 3677 7613060 - Fax: +49 3677 7613069 - E-mail: info@solvimus.de

Version: 2026.04